Data Sheet | Item Number: 857-304

Relay module; Nominal input voltage: 24 VDC; 1 changeover contact; Limiting continuous current: 6 A; Yellow status indicator; Module width: 6 mm; gray

https://www.wago.com/857-304

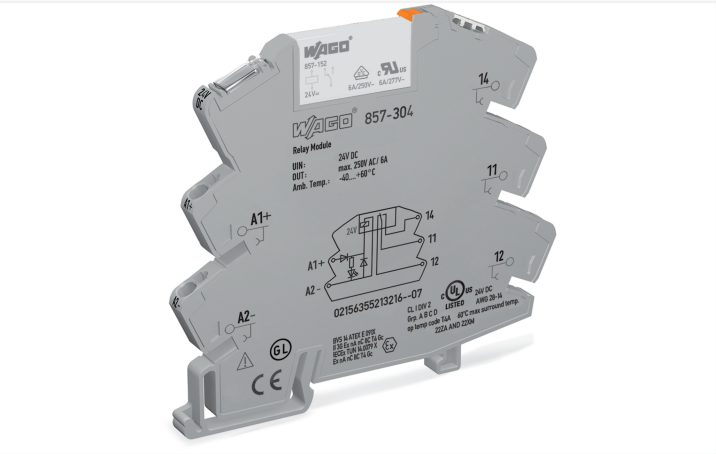

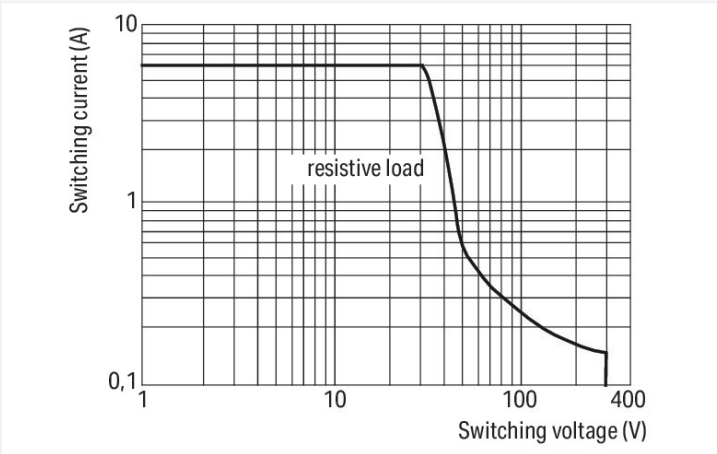

Color: gray

DC load limit curve

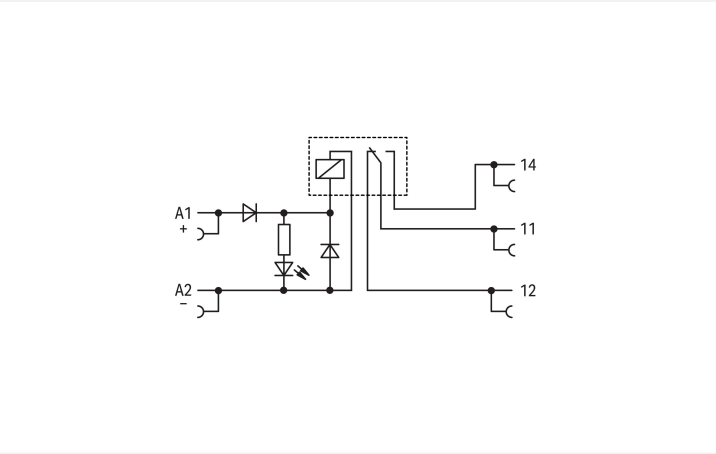

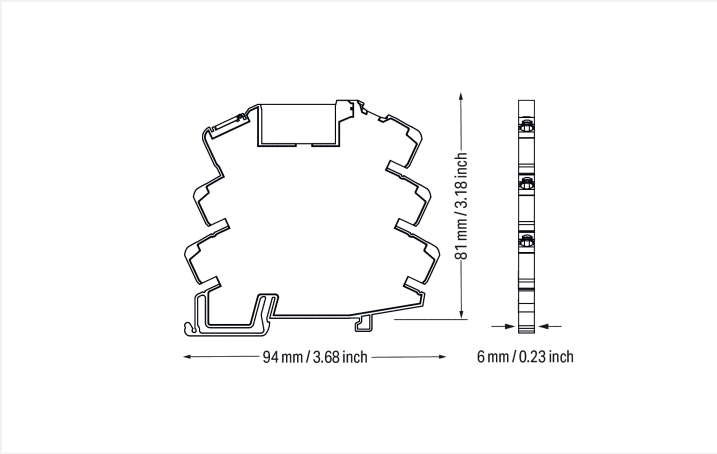

Notes

Safety Information	Adjacent devices of the same type are devices of the same design (series) that are arranged next to one another on the DIN-rail with the same orientation. An end stop (249-116) must be fitted to devices of other types for compliance with the reinforced insulation requirements.
Note	To protect the relay coils and contacts, inductive loads must be dampened with an effective protection circuit.

Technical data

Control circuit

Nominal input voltage U_N	24 VDC
Input voltage range	-15 ... +20 %
Nominal input current at U_N	10 mA

Load circuit

Number of changeover/switchover contacts	1
Contact material (relay)	$AgSnO_2$
Limiting continuous current	6 A
Inrush current (resistive) max.	(AC) 20 A / 0.02 s
Switching Voltage, Max.	250 VAC
Switching power (resistive) max.	AC 1500 VA; DC (see load limit curve)
Switching capacity	AC-15: 3 A / 250 VAC; DC-13: 2 A / 24 VDC
Recommended minimum load	10 V / 10 mA; 24 V / 1 mA

Continued on next page

Load circuit

Pull-in time (typ.)	6 ms
Drop-out time (typ.)	6 ms
Bounce time (typ.)	3.5 ms
Electrical life (NO; resistive load; 23 °C)	50 x 10^3 switching operations
Mechanical life	5 x 10^6 switching operations
Switching frequency with/without load (max.)	6 min^{-1} / 180 min^{-1}

Signaling

Status indicator	Yellow LED

Safety and protection

Rated Voltage	300 V
Rated impulse withstand voltage	4 kV
Type of circuits	Mains circuits
Overvoltage category	III
Pollution degree	2
Dielectric strength (control/load circuit) (AC, 1 min)	3.51 kVrms
Dielectric strength (open contact) (AC, 1 min)	1 kVrms
Insulation type (control/load circuit)	Reinforced insulation (safe isolation)
Insulation type (between adjacent devices of the same type)	Double insulation (safe isolation)
Insulation type (to adjacent devices of different types)	Basic insulation
Safety Information	Adjacent devices of the same type are devices of the same design (series) that are arranged next to one another on the DIN-rail with the same orientation. An end stop (249-116) must be fitted to devices of other types for compliance with the reinforced insulation requirements.
Protection type	IP20

Connection Data

Connection technology	Push-in CAGE CLAMP®
Solid conductor	0.34 … 2.5 mm² / 22 … 14 AWG
Fine-stranded conductor	0.34 … 2.5 mm² / 22 … 14 AWG
Fine-stranded conductor; with insulated ferrule	0.34 … 1.5 mm² / 22 … 16 AWG
Strip length	9 … 10 mm / 0.35 … 0.39 inches

Physical data

Width	6 mm / 0.236 inches
Height	94 mm / 3.701 inches
Depth from upper-edge of DIN-rail	81 mm / 3.189 inches

Mechanical data

Mounting type	DIN-35 rail
Mounting position	horizontal (standing/lying); vertical

Material data

Note (material data)	Information on material specifications can be found here
Color	gray
Insulation material (main housing)	Polyamide (PA66)
Material group	I
Flammability class per UL94	V0
Fire load	0.438 MJ
Weight	31.6 g

 Continued on next page

Environmental requirements

Ambient temperature (operation at U_N)	-40 … +60 °C
Ambient temperature (storage)	-40 … +70 °C
Processing temperature	-25 … +50 °C
Temperature range of connection cable	≥ ($T_{ambient}$ + 30 K)
Relative humidity	5 … 85 % (no condensation permissible)
Operating altitude (max.)	2000 m

Standards and Specifications

Standards/specifications	EN 61010-2-201 EN 61810-1 EN 61373 UL 508 ATEX IECEx DNV

Basic relay

WAGO Basic Relay	857-152

Commercial data

Product Group	6 (INTERFACE ELECTRONIC)
PU (SPU)	25 (1) pcs
Packaging type	Box
Country of origin	CN
GTIN	4050821797807
Customs tariff number	85364900990

Product Classification

UNSPSC	39122334
eCl@ss 10.0	27-37-16-01
eCl@ss 9.0	27-37-16-01
ETIM 9.0	EC001437
ETIM 10.0	EC001437
ECCN	NO US CLASSIFICATION

Environmental Product Compliance

CAS-No.	7439-92-1 79-94-7
REACH Candidate List Substance	2,2',6,6'-tetrabromo-4,4'-isopropylidenediphenol Lead
RoHS Compliance Status	Compliant,No Exemption
SCIP notification number (Austria)	890bbd29-8a39-46b4-aa2b-b445d7383193
SCIP notification number (Belgium)	cd09fda5-b324-4734-995a-ff29c0c9eda6
SCIP notification number (Bulgaria)	04a750e3-84ea-4ba5-9ab2-55266b4db0b2
SCIP notification number (Czech Republic)	6dc67810-1040-4e3a-8eea-02782e900886
SCIP notification number (Denmark)	77efef82-3203-4bde-a1bd-42f7117d1652
SCIP notification number (Finland)	7c985561-ce96-4278-8f64-22962c26fcea
SCIP notification number (France)	6f74c20f-88ae-49b6-b0b5-f967866300f0
SCIP notification number (Germany)	c16952ac-475c-4c3c-a38b-72d416451f94
SCIP notification number (Hungary)	b36536ad-167a-4b9e-88f3-28cb23c555a6
SCIP notification number (Italy)	9f92e62d-bd04-48c9-8dc1-d98000af3646
SCIP notification number (Netherlands)	92b96baf-e008-48e0-b506-aea3cd047c43
SCIP notification number (Poland)	d641b813-4032-4bec-8ce1-00daa7dd4104
SCIP notification number (Romania)	accd36a7-2fff-41da-bcac-fd6f86b4a8e2

 Continued on next page

Environmental Product Compliance

SCIP notification number (Sweden)	2a874ee1-c3dd-4c7c-b371-75ad3afd11c6

Approvals / Certificates

General approvals

Approval	Standard	Certificate Name
EAC GZO Almaty Standart	TP TC 004/2011	EAC CoC 03078
UL Underwriters Laboratories Inc. (ORDINARY LOCATIONS)	UL 508	E175199 Sec.4

Declarations of conformity and manufacturer's declarations

Approval	Standard	Certificate Name
EU-Declaration of Conformity WAGO GmbH & Co. KG	-	-
UK-Declaration of Conformity WAGO GmbH & Co. KG	-	-

Approvals for marine applications

Approval	Standard	Certificate Name
BV Bureau Veritas S.A.	Rules for class. of Steel Ships	40179_C0
DNV DNV Germany GmbH	DNV-CG-0339,Aug.2021	TAA00001D1
PRS Polski Rejestr Statków	-	TE/1098/880590/23

Approvals for hazardous areas

Approval	Standard	Certificate Name
ATEX DEKRA EXAM GmbH	EN 60079-0	BVS_14_ATEX_E_091_X (II 3G Ex ec nC IIC T4 Gc; II 3G Ex ec IIC T4 Gc)
CCC CNEX	CNCA-C23-01	2020312304000757 (Ex ec nC IIC T4 Gc)
IECEx DEKRA EXAM GmbH	IEC 60079-0	IECEX_BVS_14.0079X_Issue_3 (Ex ec nC IIC T4 Gc; Ex ec IIC T4 Gc)
UKEx WAGO GmbH & Co. KG	EN 60079-0	UKCA_WAGO22UKEX002X_ec nC
UL Underwriters Laboratories Inc. (HAZARDOUS LOCATIONS)	UL 121201	E198726

1 Compatible Products

1.1 Optional Accessories

1.1.1 Basic relay

1.1.1.1 Basic relay

Item No.: 857-152
Basic relay; Nominal input voltage: 24 VDC; 1 changeover contact; Limiting continuous current: 6 A; Module width: 5 mm; Module height: 15 mm

 Continued on next page

1.1.2 Ferrule

1.1.2.1 Ferrule

Item No.: 216-241
Ferrule; Sleeve for 0.5 mm² / 20 AWG; insulated; electro-tin plated; electrolytic copper; gastight crimped; acc. to DIN 46228, Part 4/09.90; white

Item No.: 216-242
Ferrule; Sleeve for 0.75 mm² / 18 AWG; insulated; electro-tin plated; electrolytic copper; gastight crimped; acc. to DIN 46228, Part 4/09.90; gray

Item No.: 216-243
Ferrule; Sleeve for 1 mm² / AWG 18; insulated; electro-tin plated; electrolytic copper; gastight crimped; acc. to DIN 46228, Part 4/09.90; red

Item No.: 216-244
Ferrule; Sleeve for 1.5 mm² / AWG 16; insulated; electro-tin plated; electrolytic copper; gastight crimped; acc. to DIN 46228, Part 4/09.90; black

1.1.3 Interface module

1.1.3.1 Interface adapters

Item No.: 857-981
Interface adapter; 14-pole; High-side switching input

Item No.: 857-982
Interface adapter; 14-pole; High-side switching output

Item No.: 857-986
Interface adapter; 15-pole; High-side switching input

1.1.4 Jumper

1.1.4.1 Jumper

Item No.: 281-482
Jumper; 2-way; insulated; gray

Item No.: 859-410/000-006
Jumper; for jumper slot; 10-way; insulated; blue

Item No.: 859-410
Jumper; for jumper slot; 10-way; insulated; light gray

Item No.: 859-410/000-005
Jumper; for jumper slot; 10-way; insulated; red

Item No.: 859-410/000-029
Jumper; for jumper slot; 10-way; insulated; yellow

Item No.: 859-402/000-006
Jumper; for jumper slot; 2-way; insulated; blue

Item No.: 859-402
Jumper; for jumper slot; 2-way; insulated; light gray

Item No.: 859-402/000-005
Jumper; for jumper slot; 2-way; insulated; red

Item No.: 859-402/000-029
Jumper; for jumper slot; 2-way; insulated; yellow

Item No.: 859-403/000-006
Jumper; for jumper slot; 3-way; insulated; blue

Item No.: 859-403
Jumper; for jumper slot; 3-way; insulated; light gray

Item No.: 859-403/000-005
Jumper; for jumper slot; 3-way; insulated; red

Item No.: 859-403/000-029
Jumper; for jumper slot; 3-way; insulated; yellow

Item No.: 859-404/000-006
Jumper; for jumper slot; 4-way; insulated; blue

Item No.: 859-404
Jumper; for jumper slot; 4-way; insulated; light gray

Item No.: 859-404/000-005
Jumper; for jumper slot; 4-way; insulated; red

Item No.: 859-404/000-029
Jumper; for jumper slot; 4-way; insulated; yellow

Item No.: 859-405/000-006
Jumper; for jumper slot; 5-way; insulated; blue

Item No.: 859-405
Jumper; for jumper slot; 5-way; insulated; light gray

Item No.: 859-405/000-005
Jumper; for jumper slot; 5-way; insulated; red

Item No.: 859-405/000-029
Jumper; for jumper slot; 5-way; insulated; yellow

Item No.: 859-406/000-006
Jumper; for jumper slot; 6-way; insulated; blue

Item No.: 859-406
Jumper; for jumper slot; 6-way; insulated; light gray

Item No.: 859-406/000-005
Jumper; for jumper slot; 6-way; insulated; red

Item No.: 859-406/000-029
Jumper; for jumper slot; 6-way; insulated; yellow

Item No.: 859-407/000-006
Jumper; for jumper slot; 7-way; insulated; blue

Item No.: 859-407
Jumper; for jumper slot; 7-way; insulated; light gray

Item No.: 859-407/000-005
Jumper; for jumper slot; 7-way; insulated; red

 Continued on next page

1.1.4.1 Jumper

Item No.: 859-407/000-029
Jumper; for jumper slot; 7-way; insulated; yellow

Item No.: 859-408/000-006
Jumper; for jumper slot; 8-way; insulated; blue

Item No.: 859-408
Jumper; for jumper slot; 8-way; insulated; light gray

Item No.: 859-408/000-005
Jumper; for jumper slot; 8-way; insulated; red

Item No.: 859-408/000-029
Jumper; for jumper slot; 8-way; insulated; yellow

Item No.: 859-409/000-006
Jumper; for jumper slot; 9-way; insulated; blue

Item No.: 859-409
Jumper; for jumper slot; 9-way; insulated; light gray

Item No.: 859-409/000-005
Jumper; for jumper slot; 9-way; insulated; red

Item No.: 859-409/000-029
Jumper; for jumper slot; 9-way; insulated; yellow

1.1.5 Marking

1.1.5.1 Double marker carrier

Item No.: 209-128
Adaptor; gray

1.1.5.2 Group marker carrier

Item No.: 249-105
Group marker carrier; gray

1.1.5.3 Marker

Item No.: 209-183
Marker; white

Item No.: 793-5501
WMB marking card; as card; for terminal block width 5 - 17.5 mm; stretchable 5 - 5.2 mm; plain; snap-on type; white

Item No.: 793-502
WMB marking card; as card; MARKED; 1 ... 10 (10x); not stretchable; Horizontal marking; snap-on type; white

Item No.: 793-566
WMB marking card; as card; MARKED; 1 ... 50 (2x); not stretchable; Horizontal marking; snap-on type; white

Item No.: 793-503
WMB marking card; as card; MARKED; 11 ... 20 (10x); not stretchable; Horizontal marking; snap-on type; white

Item No.: 793-504
WMB marking card; as card; MARKED; 21 ... 30 (10x); not stretchable; Horizontal marking; snap-on type; white

Item No.: 793-505
WMB marking card; as card; MARKED; 31 ... 40 (10x); not stretchable; Horizontal marking; snap-on type; white

Item No.: 793-506
WMB marking card; as card; MARKED; 41 ... 50 (10x); not stretchable; Horizontal marking; snap-on type; white

Item No.: 793-501
WMB marking card; as card; not stretchable; plain; snap-on type; white

Item No.: 2009-115
WMB-Inline; for Smart Printer; 1500 pieces on roll; stretchable 5 - 5.2 mm; plain; snap-on type; white

 Continued on next page

1.1.5.4 Marking device

Item No.: 210-110
Fiber-tip pen

1.1.5.5 Marking strip

Item No.: 2009-110
Marking strips; for Smart Printer; on reel; not stretchable; plain; snap-on type; white

1.1.5.6 Protective marker cover

Item No.: 209-184
Protection cover; transparent

1.1.6 Tool

1.1.6.1 Operating tool

Item No.: 210-720
Operating tool; Blade: 3.5 x 0.5 mm; with a partially insulated shaft; multicoloured

Installation Notes

Conductor termination

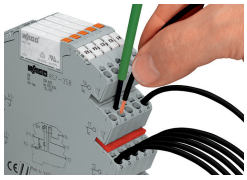

Conductor termination

Commoning

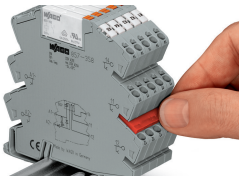

Easy commoning using adjacent jumpers

 Continued on next page

Marking

Marking via WMB Multi Marking System.

Installation

Removing a relay via ejector.