piab Evolving automation



Item no: FCF35P.4R.04UF

Suction cup FCF35P Polyurethane 55/60, G3/8" male, with mesh filter

- Special designed friction cups for oily surfaces, such as sheets in metal forming processes.
- Normal wear on friction cup will not affect the long term shear force performance.
- Best choice if > 0.1g/m2 press oil is used on the sheet.
- Thanks to the strong grip on oily surfaces, the suction cups can withstand high shear forces, typically 2–4 times more than corresponding conventional suction cups.
- The "FCF" design is suitable for slightly domed and flat surfaces, e.g., such as those encountered when handling metal sheets in press lines.
- The suction cups have support cleats that prevent thin objects from being disfigured.
- DURAFLEX® suction cups manufactured in a specially developed material that features the elasticity of rubber and wear resistance of polyurethane. The material does not leave any marks on the objects handled.

General

Item number, alternative	E12043535
Suction cup shape	Flat Concave
Application	Oily sheet metal
Suction cup design	Round
Characteristics	Oily sheet metal
Material	Polyurethane (PU)
Suction cup model	FCF
Weight	0.67 - 0.53 oz
Volume	0.31 in^3
Suction cup model	FCF35P Dry metal sheet
Specification	Dry metal sheet
Movement, vertical max.	0.098 in
Curve radius, min.	1.57 in
Suction cup model	FCF35P Oily steel plate
Specification	Oily steel plate

Fitting option	Filter mesh
Fitting size	3/8"
Fitting style	Male
Fitting type	G-thread

Height	1.14 in
Outer diameter, actuated	1.52 in
Outer diameter	1.38 in

Performance - lifting forces

FCF35P Dry metal sheet		
17.72 -inHg	9.44 lbf	6.74 lbf
26.58 -inHg	13.039 lbf	9.44 lbf
FCF35P Oily steel plate		
17.72 -inHg	7.64 lbf	5.85 lbf
26.58 -inHg	11.24 lbf	7.19 lbf

Material

Name		
Color	Orange	
Temperature	50 - 122 °F	50 - 122 °F
Hardness	55 °Shore A	60 °Shore A

Alcohol	n/a	n/a
Concentrated acids	+	+
Ethanol	+	+
Hydrolysis	+	+
Methanol	-	-
Oil	+++	+++
Oxidation	-	-
Gasoline	+	+
Wear resistance	+++	+++
Weather and ozone	+++	+++

Dimensional drawings

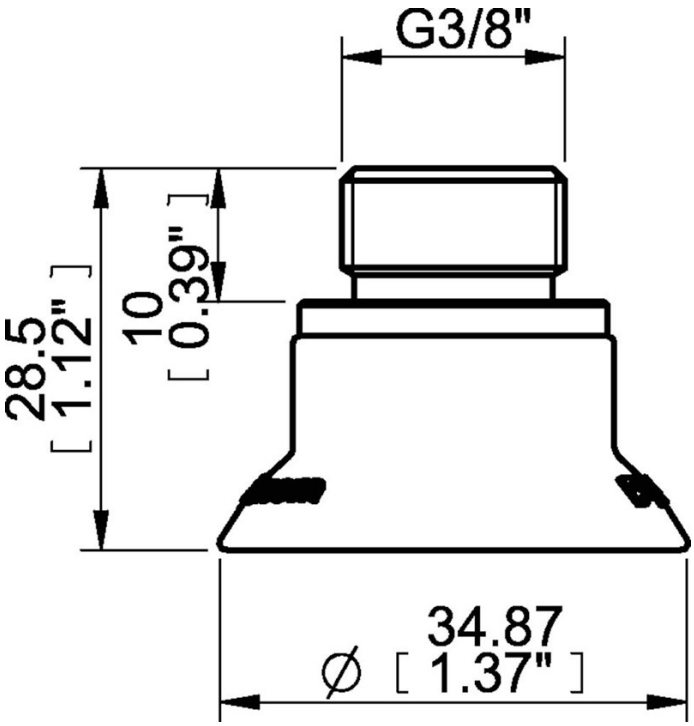

Values specified in the data sheet are tested at:

- Room temperature: (20° C [68° F] ± 3° C [5.5° F])
- Standard atmosphere: (101.3 [29.9 inHg] ± 1.0 kPa [0.3 inHg])
- Relative humidity: 0-100%
- Compressed air quality: DIN ISO 8573-1 class 4